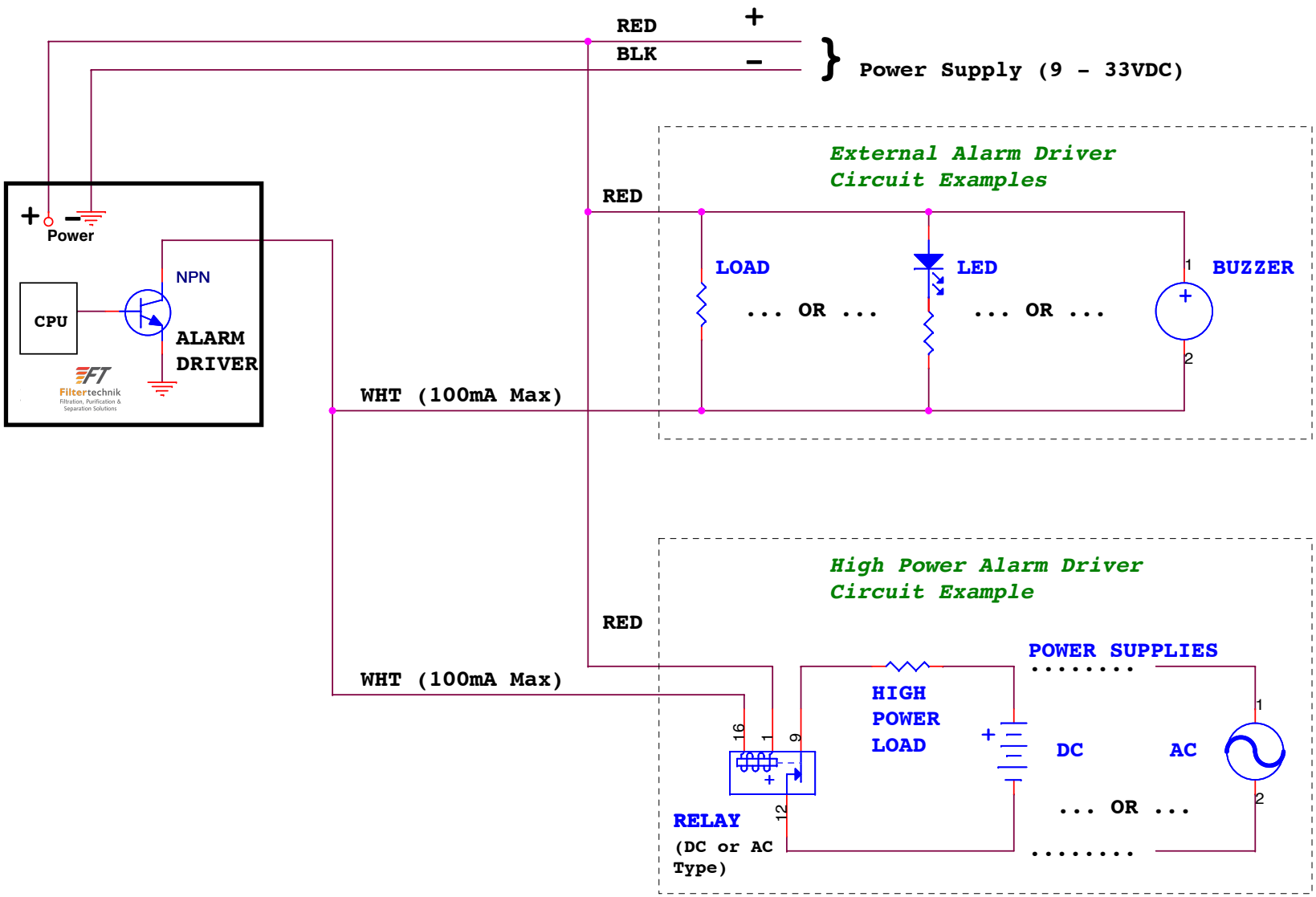
RED
+
BLK
–
Power Supply (9 - 33VDC)
External Alarm Driver
Circuit Examples
RED
+
–
Power
NPN
CPU
ALARM
DRIVER
Filtertechnik
Filtration, Purification &
Separation Solutions
LOAD
... OR ...
LED
... OR ...
1
BUZZER
2
WHT (100mA Max)
High Power Alarm Driver
Circuit Example
RED
POWER SUPPLIES
WHT (100mA Max)
HIGH
POWER
LOAD
16
1
9
12
DC
AC
1
2
... OR ...
RELAY
(DC or AC
Type)